GMC/CHEVROLET

SAVANA/EXPRESS

UPFIT GUIDE

RANGER™ DESIGN

THE PERFECT FIT FOR YOUR TOUGHEST JOBS

HELPING MOBILE TECHNICIANS WORK MORE EFFECTIVELY BY PROVIDING ORGANIZED STORAGE SOLUTIONS

AT RANGER DESIGN, WE BELIEVE MORE IS POSSIBLE.

We believe work vehicles and the technicians that drive them can become more organized, more efficient, more productive and more profitable. At Ranger Design we're committed to bringing you the products and services that make that possible.

More means helping you choose the right work van for your application, as well as giving you engineering support and expert advice to help design the most efficient work space in your new vehicle.

More also means getting that new van outfitted and on the road faster, so you can start using it for the reason you bought it.

We're committed to bringing you more, because we believe more is possible.

RANGER™ DESIGN

CONTRACTOR
P. 6 – 7

SERVICE
P. 8 – 9

ELECTRICAL
P. 10 – 11

HVAC
P. 12 – 13

DELIVERY
P. 14 – 15

ALUMINUM
P. 16 – 18

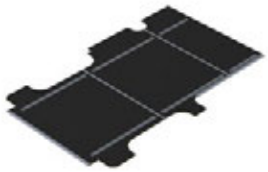

FLOOR
P. 19

ACCESSORIES
P. 20 – 21

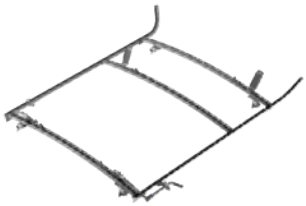

LADDER RACKS
P. 22

Over 350 Distributors Across the Continent

Buy	Ranger Design Quickship service is available through your local distributor. **rangerdesign.com/find-dealer**
Lead Time	Quickship orders placed with Ranger Design before 1PM EST, will ship from our factory in the next business day.

All products shown in this upfit guide are available on Quickship

HOW TO USE THE LAYOUT GUIDE

INSIDE ROOF HEIGHT

To determine the maximum shelf height that can be used in the van.

PARTITION DEPTH

This indicates the space taken up by our partition for this vehicle. Please note that this measurement is determined by the partition that encroaches the most. Some partitions may take up less space. Take note that this measurement may not necessarily be on the floor.

DOOR OPENING

To determine where shelving will land in relation to the door opening. Use this measurement to determine the space available for drawer units.

DIMENSIONS IN RED

These dimensions indicate unique measurements for each wheelbase. Use red dimensions to determine the exact wheelbase of your van.

FLOOR SPACE

This area is usable floor space but due to curvature of the van there may not be the same available area at the roof. Please measure actual van for specific measurement at roof.

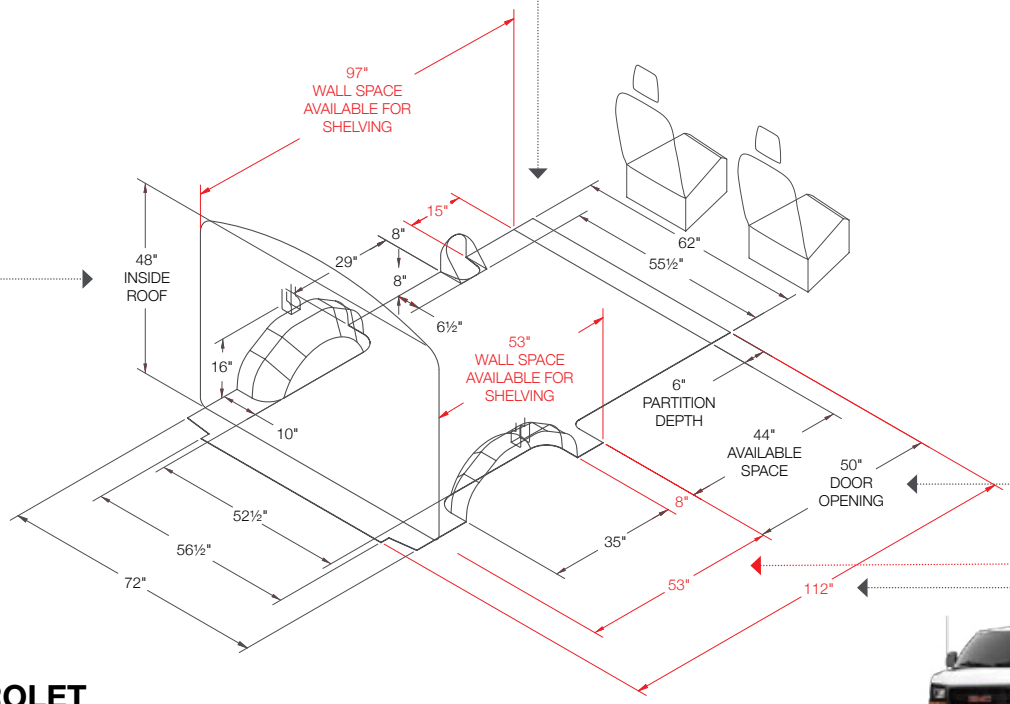

GMC/CHEVROLET
SAVANA/EXPRESS

Regular 135" Wheelbase

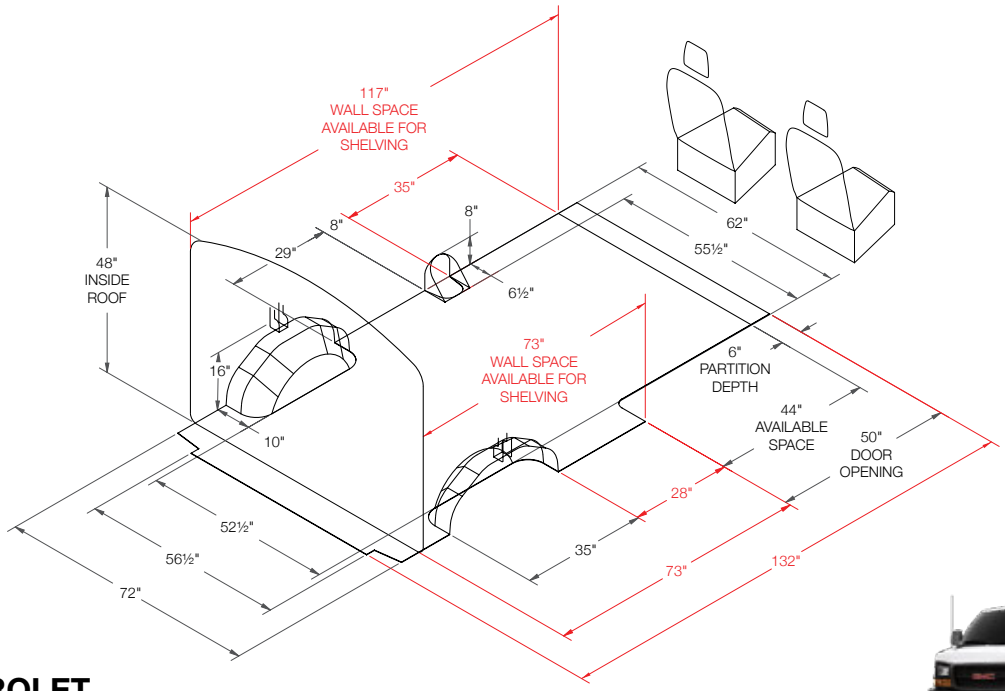

GMC/CHEVROLET
SAVANA/EXPRESS
Extended 155" Wheelbase

Storage zones

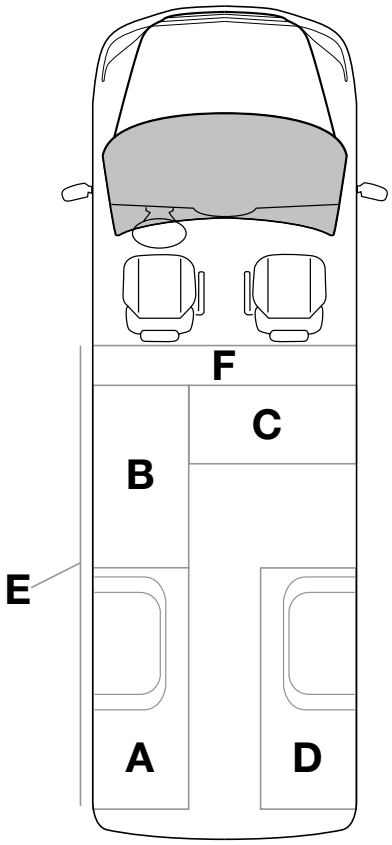

A - Driver Side Rear
B - Driver Side Front
C - Partition and Slide Door
D - Passenger Side
E - Roof
F - Partition

GSR-10

135" WHEELBASE

› Standard Roof

Qty	Part #	Description
1	**6070**	6" Hook, 3" opening, painted
1	**C20-GS**	Straight steel partition with perforated window, no access
1	**N4-RS48-3**	Steel shelving unit for low roof van 14" D x 48" W x 44.5" H
1	**N4-RS84-3**	Steel shelving unit for low roof van 14" D x 84" W x 44.5" H

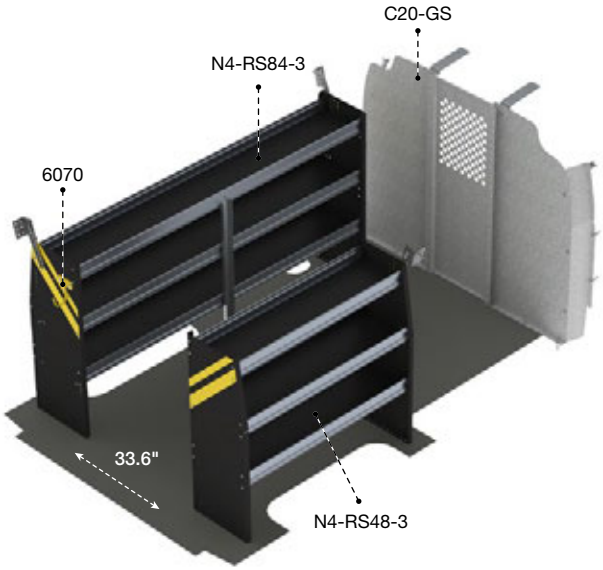

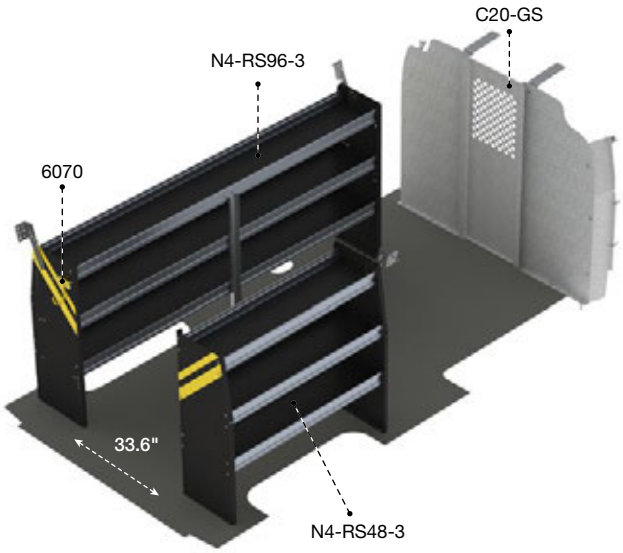

GSL-10

155" WHEELBASE

› Standard Roof

Qty	Part #	Description
1	**6070**	6" Hook, 3" opening, painted
1	**C20-GS**	Straight steel partition with perforated window, no access
1	**N4-RS48-3**	Steel shelving unit for low roof van 14" D x 48" W x 44.5" H
1	**N4-RS96-3**	Steel shelving unit for low roof van 14" D x 96" W x 44.5" H

GSR-10

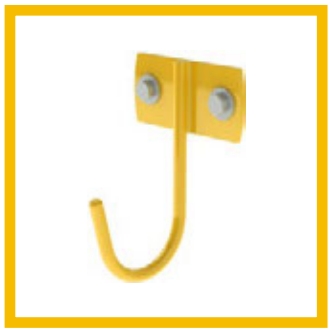

6070

6" Hook,
3" opening,
painted

GSR-16

135" WHEELBASE

› Standard Roof

Qty	Part #	Description
1	**6070**	6" Hook, 3" opening, painted
1	**6072**	8" Swivel hook, 4" opening, painted
4	**62-U1114**	14" deep plastic bin
1	**62-UDR12**	Set of 5 dividers for a 12" Shelf
1	**62-UDR14**	Set of 5 dividers for a 14" Shelf
1	**C20-GS**	Straight steel partition with perforated window, no access
1	**N4-RS48-3**	Steel shelving unit for low roof van 14" D x 48" W x 44.5" H
1	**N4-RS84-3**	Steel shelving unit for low roof van 14" D x 84" W x 44.5" H
2	**X50-B**	Compact 2-drawer unit

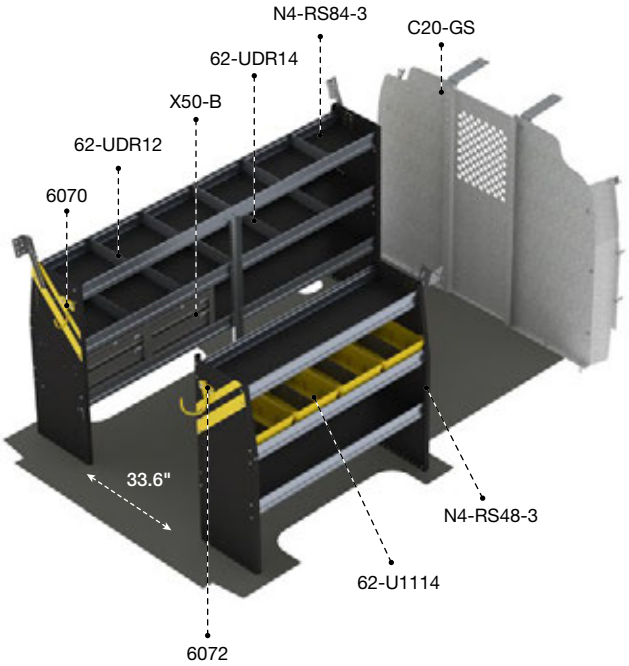

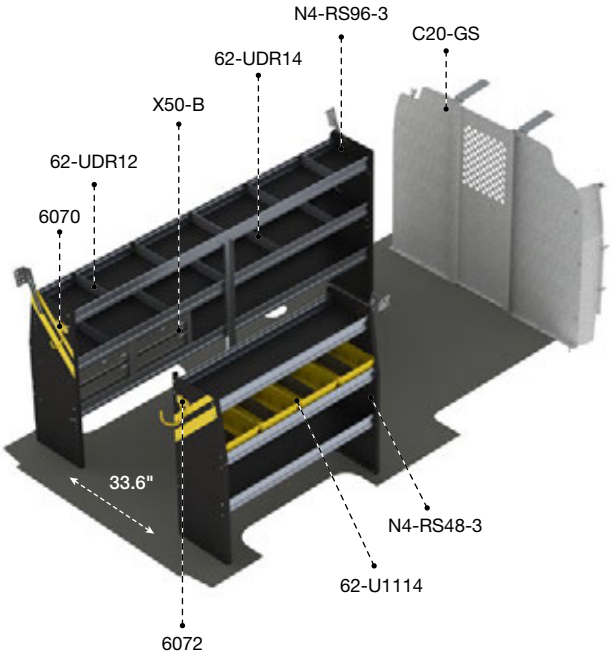

GSL-16

155" WHEELBASE

› Standard Roof

Qty	Part #	Description
1	**6070**	6" Hook, 3" opening, painted
1	**6072**	8" Swivel hook, 4" opening, painted
4	**62-U1114**	14" deep plastic bin
1	**62-UDR12**	Set of 5 dividers for a 12" Shelf
1	**62-UDR14**	Set of 5 dividers for a 14" Shelf
1	**C20-GS**	Straight steel partition with perforated window, no access
1	**N4-RS48-3**	Steel shelving unit for low roof van 14" D x 48" W x 44.5" H
1	**N4-RS96-3**	Steel shelving unit for low roof van 14" D x 96" W x 44.5" H
2	**X50-B**	Compact 2-drawer unit

GSR-16

6072

8" Swivel hook,
4" opening, painted

X50-B

2 Drawer cabinet

62-U1114

14" Deep plastic bin
with a center divider

FOR MORE ACCESSORIES, SEE PAGE 20.

GSR-11

135" WHEELBASE

› Standard Roof

Qty	Part #	Description
1	**6063**	Paper holder, extra deep, 5 slots
1	**6070**	6" Hook, 3" opening, painted
1	**6072**	8" Swivel hook, 4" opening, painted
1	**7124**	Reel holder with two 5/8" diameter rods
7	**62-U1112**	12" deep plastic bin
2	**62-UDR14**	Set of 5 dividers for a 14" Shelf
1	**77-U1036**	Adjustable shelving door unit - 33" W - for 36" & 72" shelves
1	**77-U1048**	Adjustable shelving door unit - 45" W - for 48" & 96" shelves
1	**C20-GS**	Straight steel partition with perforated window, no access
1	**N4-RS48-3**	Steel shelving unit for low roof van 14" D x 48" W x 44.5" H
1	**N4-RS84-3**	Steel shelving unit for low roof van 14" D x 84" W x 44.5" H
1	**X50-B**	Compact 2-drawer unit
1	**X50-C**	Compact 3-drawer unit

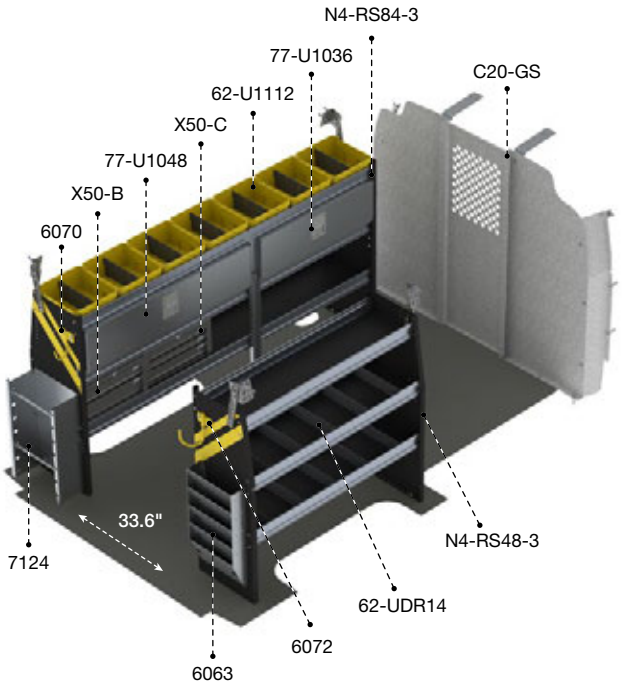

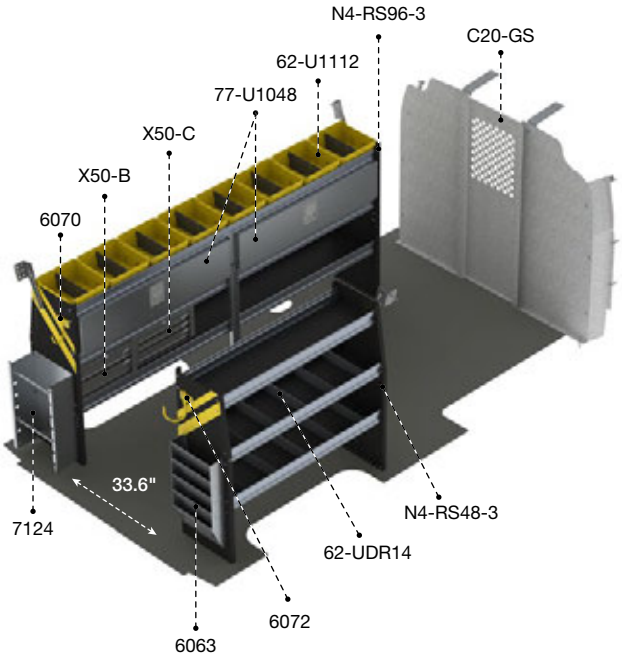

GSL-11

155" WHEELBASE

› Standard Roof

Qty	Part #	Description
1	**6063**	Paper holder, extra deep, 5 slots
1	**6070**	6" Hook, 3" opening, painted
1	**6072**	8" Swivel hook, 4" opening, painted
1	**7124**	Reel holder with two 5/8" diameter rods
8	**62-U1112**	12" deep plastic bin
2	**62-UDR14**	Set of 5 dividers for a 14" Shelf
2	**77-U1048**	Adjustable shelving door unit - 45" W - for 48" & 96" shelves
1	**C20-GS**	Straight steel partition with perforated window, no access
1	**N4-RS48-3**	Steel shelving unit for low roof van 14" D x 48" W x 44.5" H
1	**N4-RS96-3**	Steel shelving unit for low roof van 14" D x 96" W x 44.5" H
1	**X50-B**	Compact 2-drawer unit
1	**X50-C**	Compact 3-drawer unit

GSR-11

62-U1110, 62-U1112, 62-U1114

Plastic bins with a center divider
Available in 10", 12" or 14" depths

62-U1212

2 Cross dividers for bin
Fits all size bins

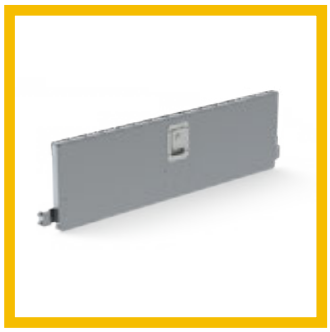

77-U1048

Adjustable shelving door unit
45" wide for a 48" or 96" shelf

FOR MORE ACCESSORIES, SEE PAGE 20.

GSR-12

135" WHEELBASE

› Standard Roof

Qty	Part #	Description
1	**6008**	3 Tier refrigerant rack for large bottles
1	**6063**	Paper holder, extra deep, 5 slots
1	**6070**	6" Hook, 3" opening, painted
1	**6072**	8" Swivel hook, 4" opening, painted
1	**6088**	Large aluminum bottle holder, with two black nylon straps
7	**62-U1112**	12" deep plastic bin
2	**62-UDR14**	Set of 5 dividers for a 14" Shelf
1	**77-U1048**	Adjustable shelving door unit - 45" W - for 48" & 96" shelves
1	**C20-GS**	Straight steel partition with perforated window, no access
1	**N4-RS48-3**	Steel shelving unit for low roof van 14" D x 48" W x 44.5" H
1	**N4-RS84-3**	Steel shelving unit for low roof van 14" D x 84" W x 44.5" H
2	**X50-B**	Compact 2-drawer unit

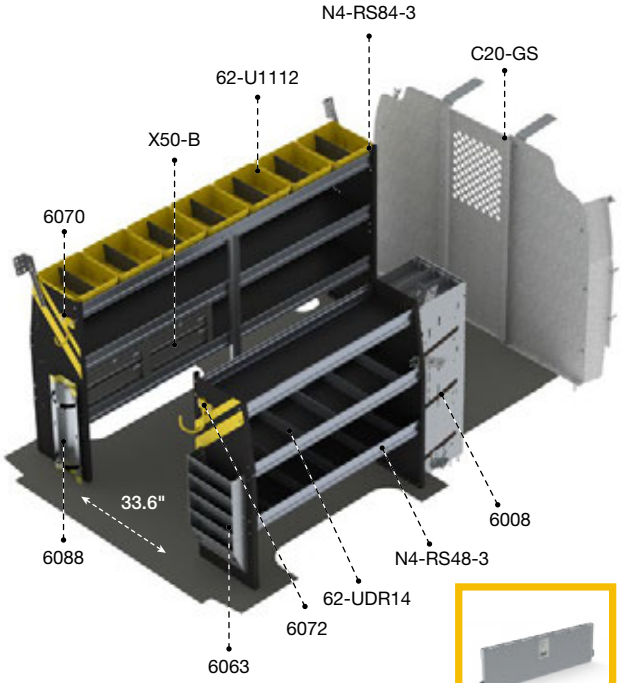

77-U1048

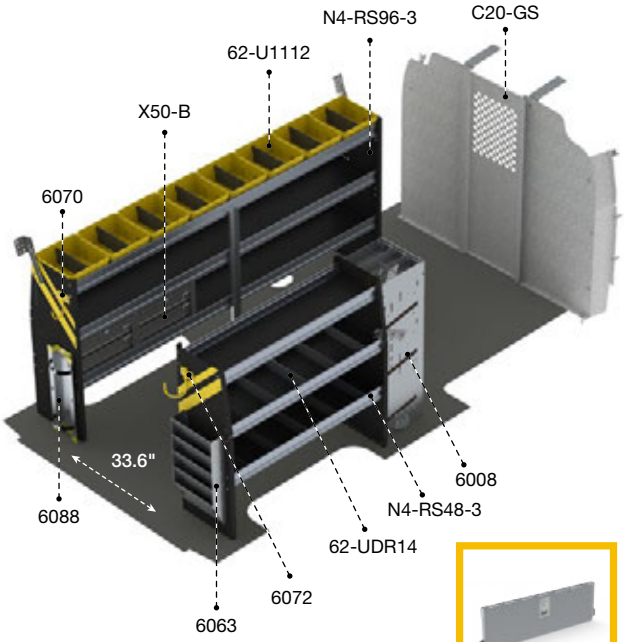

77-U1048

GSL-12

155" WHEELBASE

› Standard Roof

Qty	Part #	Description
1	**6008**	3 Tier refrigerant rack for large bottles
1	**6063**	Paper holder, extra deep, 5 slots
1	**6070**	6" Hook, 3" opening, painted
1	**6072**	8" Swivel hook, 4" opening, painted
1	**6088**	Large aluminum bottle holder, with two black nylon straps
8	**62-U1112**	12" deep plastic bin
2	**62-UDR14**	Set of 5 dividers for a 14" Shelf
1	**77-U1048**	Adjustable shelving door unit - 45" W - for 48" & 96" shelves
1	**C20-GS**	Straight steel partition with perforated window, no access
1	**N4-RS48-3**	Steel shelving unit for low roof van 14" D x 48" W x 44.5" H
1	**N4-RS96-3**	Steel shelving unit for low roof van 14" D x 96" W x 44.5" H
2	**X50-B**	Compact 2-drawer unit

GSR-12

62-UDR14

Set of 5 dividers
for a 14" shelf

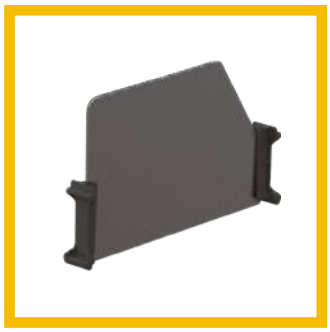

62-UDH14

Set of 5 high dividers
for a 14" shelf

6088

Large aluminum bottle holder,
with two black nylon straps

6008

3 Tier refrigerant
rack for large bottles

FOR MORE ACCESSORIES, SEE PAGE 20.

GSR-19

135" WHEELBASE

› Standard Roof

Qty	Part #	Description
1	**8548-2**	Fold-away shelving unit, 2 levels, 18" D × 55" W × 53.5" H
1	**8572-2**	Fold-away shelving unit, 2 levels, 18" D × 79" W × 53.5" H
1	**C24-GS**	Straight walk through steel partition

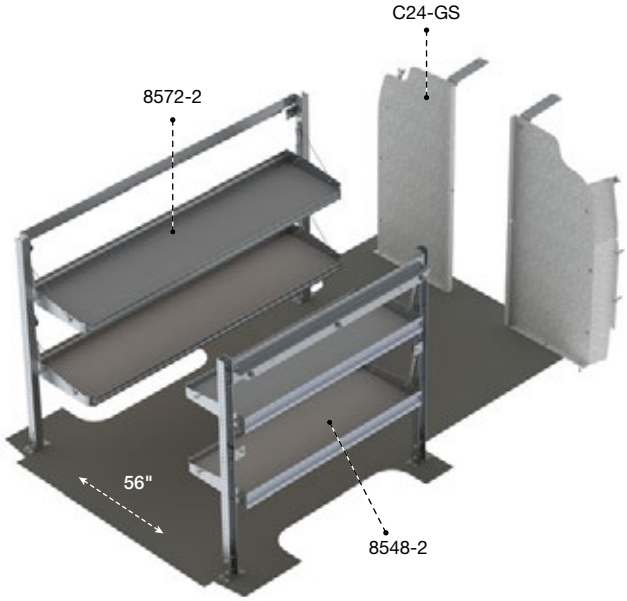

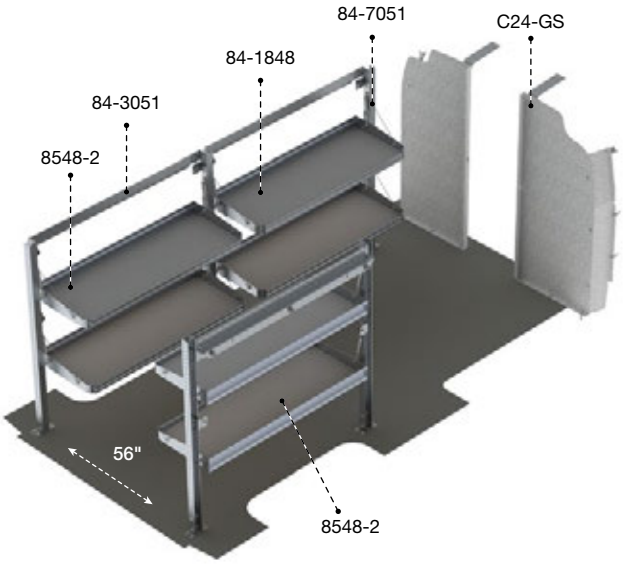

GSL-19

155" WHEELBASE

› Standard Roof

Qty	Part #	Description
2	**84-1848**	Fold-away shelf tray with gas shocks and hardware, 18" D × 48" W
1	**84-3051**	Mounting bar assembly, for fold-away shelving, 2" D × 51" W
1	**84-7051**	Post assembly for fold-away shelving, 2" D × 2" W × 51" H
2	**8548-2**	Fold-away shelving unit, 2 levels, 18" D × 55" W × 53.5" H
1	**C24-GS**	Straight walk through steel partition

GSR-19

YOUR PERSONAL
FLEX SPACE

Our fold-away shelves are designed to give you the ultimate in cargo flexibility

- Flexible
- Easy to use
- Tough

THE BENEFITS OF ALUMINUM

Weight saving equipment reduces total cost of ownership

Optimize fuel economy by decreasing overall van mass

Reduce vehicule maintenance and repairs caused by weight overload

Increase payload without sacrificing quality – it's a benefit offered only by aluminum

Did you know that for every 100 lbs reduction, you increase fuel economy by 1%?
www.fueleconomy.gov

Ranger Design is the leader for aluminum upfits in North America

GSR-27

135" WHEELBASE

› Standard Roof

Qty	Part #	Description
1	**3020-GS**	Countoured safety partition with tempered glass window
2	**5070**	Partskeeper carry case with holder
1	**6070**	6" Hook, 3" opening, painted
4	**62-U1112**	12" deep plastic bin
8	**62-U1114**	14" deep plastic bin
1	**62-UDR12**	Set of 5 dividers for a 12" Shelf
1	**62-UDR14**	Set of 5 dividers for a 14" Shelf
1	**77-U1048**	Adjustable shelving door unit - 45" W - for 48" & 96" shelves
1	**N4-RA48-3**	Aluminum shelving unit for low roof van 14" D x 48" W x 44.5" H
1	**N4-RA84-3**	Aluminum shelving unit for low roof van 14" D x 84" W x 44.5" H

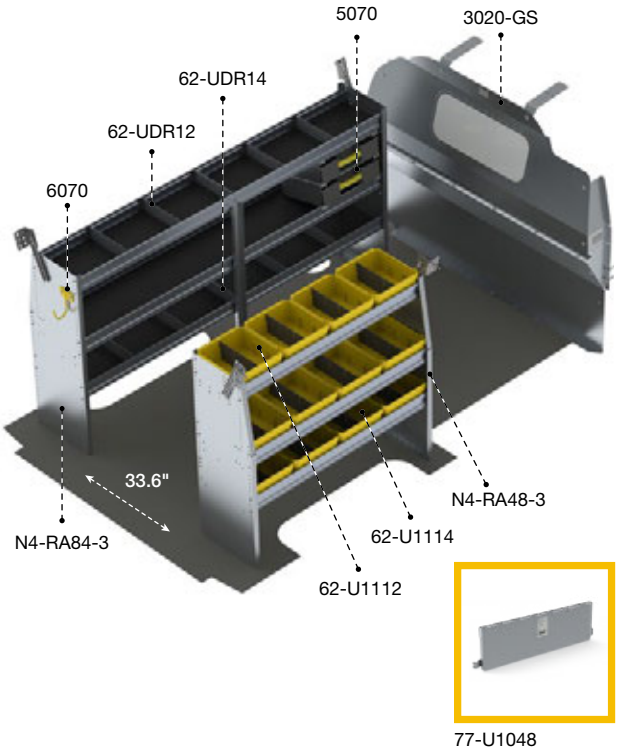

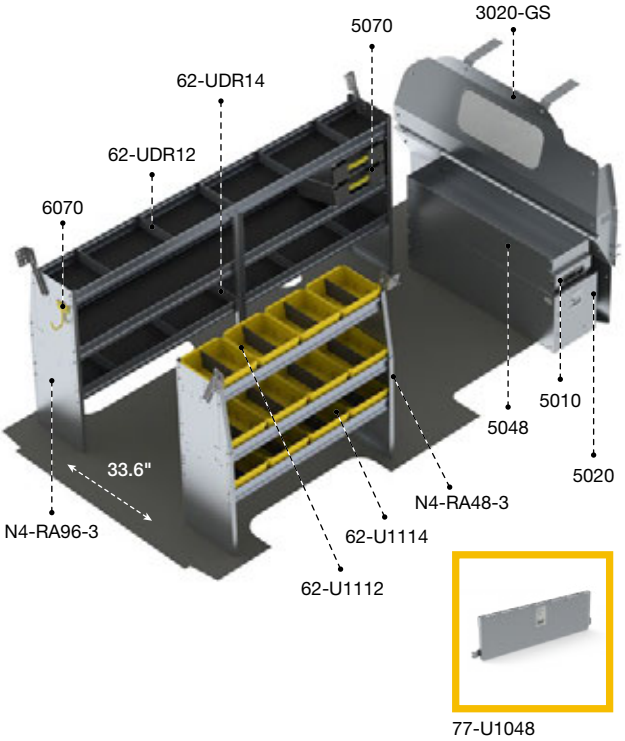

GSL-27

155" WHEELBASE

› Standard Roof

Qty	Part #	Description
1	**3020-GS**	Countoured safety partition with tempered glass window
1	**5010**	Partslider drawer 48" D
1	**5020**	Tool Drawer 48" D x 14" W x 16" H
1	**5048**	Top edge
2	**5070**	Partskeeper carry case with holder
1	**6070**	6" Hook, 3" opening, painted
4	**62-U1112**	12" deep plastic bin
8	**62-U1114**	14" deep plastic bin
1	**62-UDR12**	Set of 5 dividers for a 12" Shelf
1	**62-UDR14**	Set of 5 dividers for a 14" Shelf
1	**77-U1048**	Adjustable shelving door unit - 45" W - for 48" & 96" shelves
1	**N4-RA48-3**	Aluminum shelving unit for low roof van 14" D x 48" W x 44.5" H
1	**N4-RA96-3**	Aluminum shelving unit for low roof van 14" D x 96" W x 44.5" H

GSR-27

ALUMINUM

AN ERGONOMIC
SOLUTION TO STORAGE

Ranger Design tool drawers offer:

- Accessibility
- Security
- Organization
- Lockable

5020 Tool drawer mounted with a **5010** Partslider drawer and **5048** Top edge.

IT'S MORE THAN A FLOOR!

With incorporated mounting tracks for easy install for most Ranger Design products.

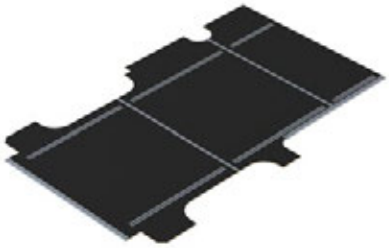

6540-GSR

Savana 135" Floor

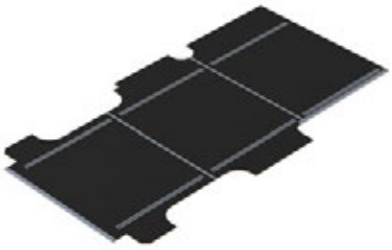

6540-GSX

Savana 155" Floor

Impact and puncture resistant floors
Preserve the cargo van interior

ACCESSORIES

6010

Two level adjustable bottle holder

6041

Locking cabinet

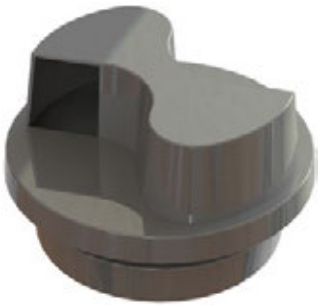

6050

Flettner vent, rotary design

6054

Hitch step, with hitch
pin to fit a 2" × 2" hitch

6057

Can holder

6063

Paper holder, extra deep, 5 slots

6068

Hard hat holder, painted wire

6070

6" Hook, 3" opening, painted

6072

8" Swivel hook, 4" opening, painted

6073

Large aluminum movable hook, 6.5" opening

6082

Triangle kit with aluminum holder

NEW!

6092-42

Universal LED light kit for trucks and vans (12V DC / 1200 Lm / 10W)

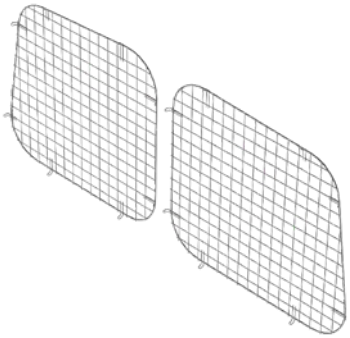

6106

Set of 2 rear window grills

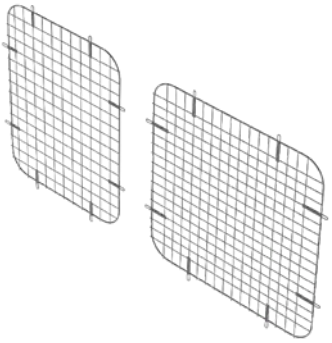

6111

Set of 2 side window grills

62-U1110, 62-U1112, 62-U1114

10", 12" or 14" Deep plastic bin
All bins come with a center divider

62-U1212

2 Cross dividers for bin
Fits all size bins

6252

Seat covers

7124

Reel holder with two 5/8" diameter rods

LADDER RACKS

Access Pro, inside ladder carrier

Aluminum

1050-FS	135", 155"	Standard	

Ladder rack accessory

Aluminum

1127	135", 155"	Standard	

Cargo rack

Aluminum

1505-GS	135", 155"	Standard	
1505-GS3	135", 155"	Standard	

Standard ladder rack

Aluminum

1510-FS	135", 155"	Standard	

Single clamp ladder rack

Aluminum

1520-FS	135", 155"	Standard	32 ft

Combination ladder rack

Aluminum

1525-FS	135", 155"	Standard	32 ft

Double clamp ladder rack

Aluminum

1530-FS	135", 155"	Standard	32 ft

1-800-565-5321
fleet@rangerdesign.com

Turn-Key Fleet Services

Ship Through or Local Installation Across North America for all Types of Cargo Vans

We are pleased to offer efficient, personalized service and to answer all questions regarding:

1. Analysis

- Cargo Needs Analysis
- Custom 3D CAD Layouts
- Hands-on Equipment Demo

2. Testing

- Test Fitting
- Pilot Build and Review
- Optimize Package Based on Technician Feedback

3. Delivery

- Delivery, Production and Installation Planning and Scheduling
- Vehicle Status Tracking

4. Service

- Dedicated Fleet Account Management Team
- 350 Ranger Design Distributor Service Support Network
- Live Customer Service

THE PERFECT FIT FOR YOUR TOUGHEST JOBS

When you want the perfect upfit solution for your work vehicle, turn to Ranger Design. Tested for toughness, Ranger Design's shelving and upfits will take whatever abuse you can dish out. Their unsurpassed craftsmanship, combined with ideal fit and finish, provide a quiet ride with no rattles.

RANGER™ DESIGN

CUSTOMER SERVICE
cs@rangerdesign.com
1-800-565-5321

rangerdesign.com

M110-174 rev.4